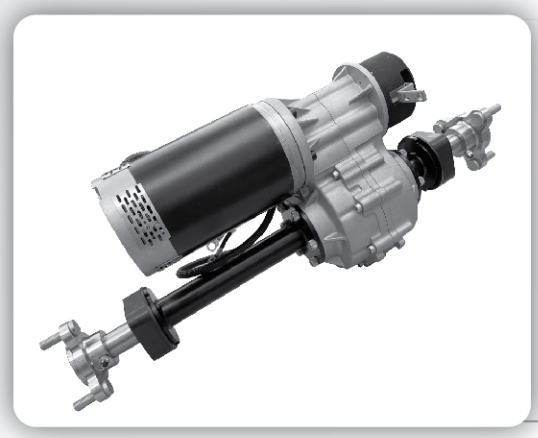

Transaxle - GT48D-18 Series

Voltage	: 12 - 36V DC
Rated Speed	: 70 - 200rpm
Rated Output Power	: 600 - 1,200W
Gear Ratio	: 29.88 : 1
Rated Torque	: 600 - 1,200kg-cm[520.8-1,041lb-in]
Loading Capability	: 5,115kg-cm [4,439.82lb-in]
Motor Diameter	: Ø122.9mm[4.84inch]
Typical Application	: Polisher, Extra Heavy Duty Scooter, Material Handling

Performance Curve

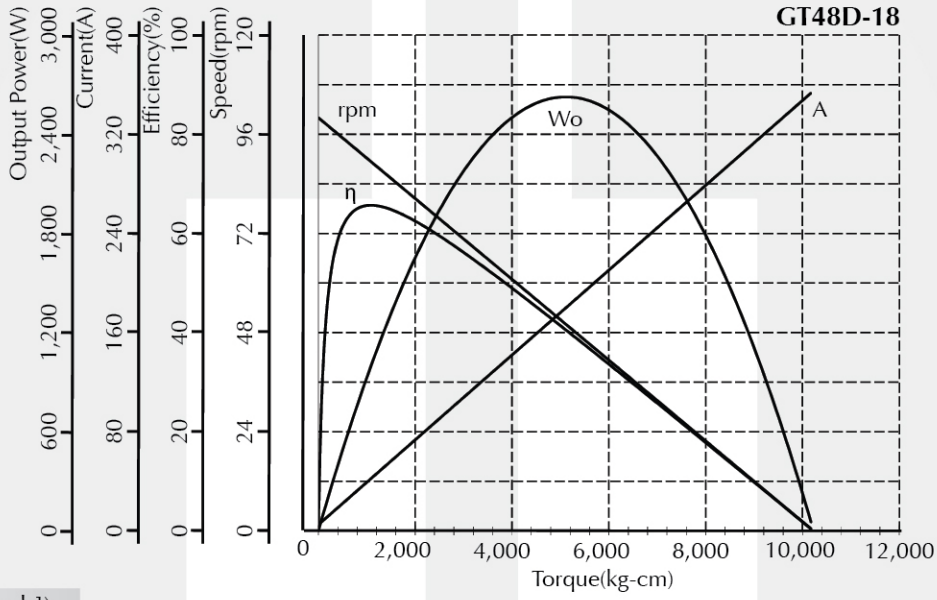

Dimension (mm[inch])

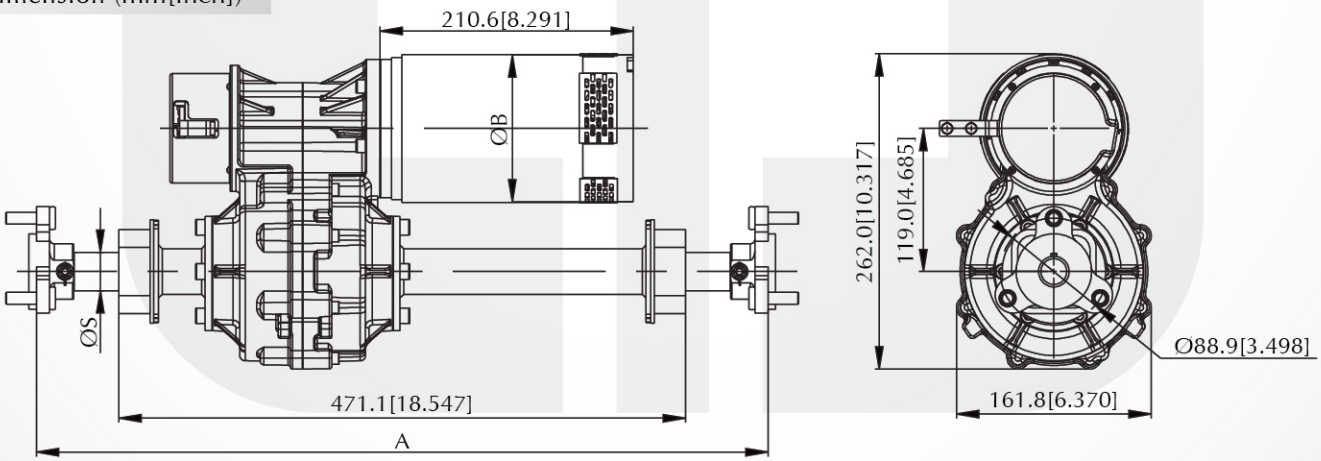

Performance (testing under room temperature)

Model	Dim A mm[inch]	Dim B mm[inch]	Dim S mm[inch]	Gear Ratio	Rated Voltage (V DC)	No Load		At Maximum Efficiency					Max Power	
						Speed (rpm)	Current (A)	Torque (kg-cm[lb-in])	Speed (rpm)	Current (A)	Output (W)	Effc'y (%)	Torque (kg-cm[lb-in])	Current (A)
GT48D-18T-01	608.3[23.95]	122.9[4.84]	25.4[1.00]	29.88:1	36	100	5	1,125[976.5]	89	43.5	1,028	65.7	5,115[4439.82]	180

The information above is for reference only, detailed specification is subject to final confirmation

Email: sales@cclmotors.com Website: http://www.cclmotors.com
4/F, No. 6, On Lok Mun Street, On Lok Tsuen, Fanling, N.T., Hong Kong. Tel: (852) 3125 0000 Fax: (852) 3125 0125